Hafa® Go

Art: 1381270, 1381271, 1381272, 1381273

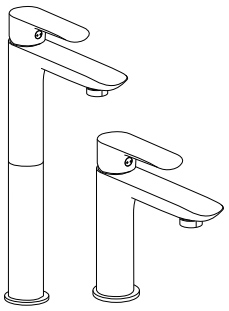

Spare Parts

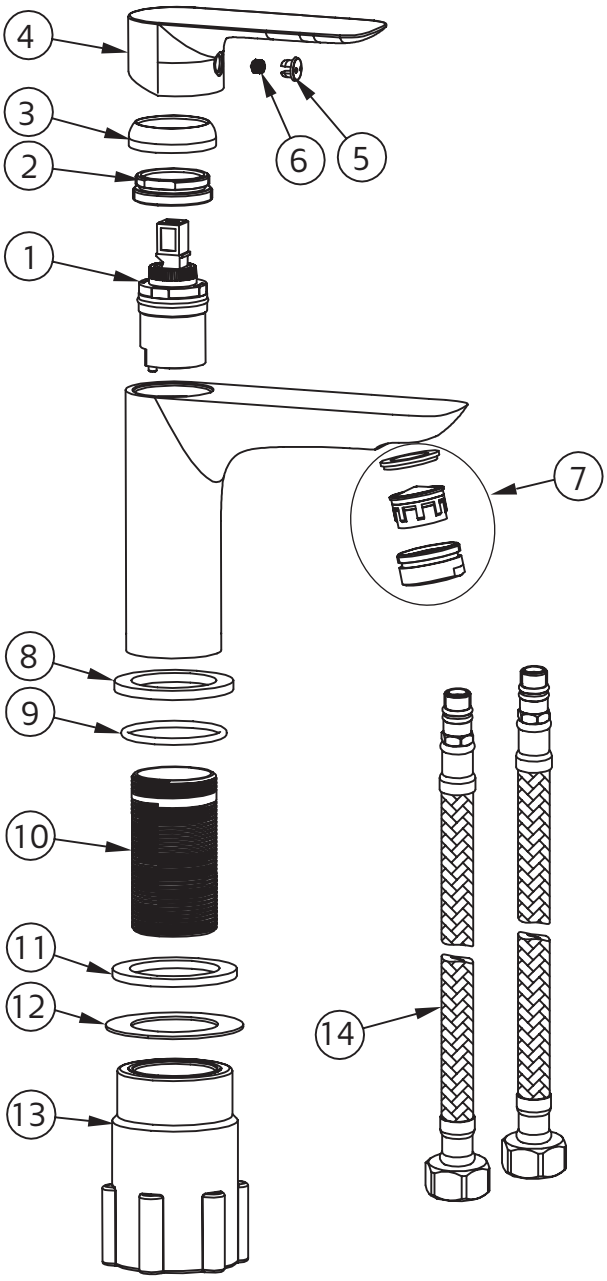

Hafa
Svarvaregatan 5, Box 525
SE-301 80 Halmstad
SWEDEN

Garanti/Warranty.
Service, resevdelar/spare-parts
Sweden: Tel: +46 (0)35 15 44 75
Norway: Tel: +47 69 31 02 30
Finland: Puh: 0207 43 50 00

www.hafa.se
www.hafa.dk
www.hafabad.no
www.hafa.se
www.hafabathroom.ru
www.hafa.eu

E-mail:
service@hafa.se
service@hafabad.no

2020-02-28

Hafa® Go Art: 1381270, 1381271, 1381272, 1381273

SKETCH NO.	SPAREPART NO.	GO TVÄTTSTÄLLSBLANDARE	GO BASIN MIXER
1	9600000	INSATS 25 mm	CARTRIDGE 25 mm
2	9600001	FIXERINGSMUTTER FÖR INSATS	LOCK RING FOR CARTRIDGE
3	9600002	DEKORRING KROM	DECORATIVE RING CHROME
4	9209694 9209695	GO ENGREPPSHANDTAG KROM GO ENGREPPSHANDAG SVART	GO HANDLE CHROME GO HANDLE BLACK
5	9308-A	RÖD/BLÅ TÄCKKÅPA DIA 6.5	BLUE/RED MARKED COVER DIA 6.5
6	9308-B	INSEX SKRUV M5 x 6 mm	ALLEN SCREW M5 x 6 mm
7	9315-L	PERLATOR NEOPEARL KROM	AERATOR NEOPEARL CHROME
8	9600004	BOTTENRING KROM	BASE RING CHROME
9	9313-I	O-RING 48 x 2.5 mm	O-RING GASKET 48 x 2.5 mm
10	9308-O	FÄSTRÖR GÄNGAD MÄSSING	THREADED MOUNTING TUBE
11	9301	PACKNING U. TVÄTTST 46.5/33 x 3 mm	GASKET BELOW BASIN 46.5/33 x 3mm
12	9302	GLIDBRICKA ÖVER FÄSTMUTTER	SLIDING WASHER ABOVE MOUNTING NUT
13	9316-C	FÄSTMUTTER STOR SVART	BLACK FIXATION NUT
14	9308-C	ANSLUTNINGSSLANG BLÅ & RÖD PAR	FLEXIBLE HOSE PAIR FOR MIXER

Hafa®

Hafa
Svarvaregatan 5, Box 525
SE-301 80 Halmstad
SWEDEN

Garanti/Warranty.
Service, resevdelar/spare-parts
Sweden: Tel: +46 (0)35 15 44 75
Norway: Tel: +47 69 31 02 30
Finland: Puh: 0207 43 50 00

www.hafa.se
www.hafa.dk
www.hafabad.no
www.hafa.se
www.hafabathroom.ru
www.hafa.eu

E-mail:
service@hafa.se
service@hafabad.no